ASSEMBLY VIDEO MAY BE AVAILABLE ON OUR WEBSITE. IF NOT, THE VIDEO USED FOR THE V4500 IS VERY SIMILAR

Note bolt thread area should be on outside of hoist

If this print has colored cables they are for easier understanding of how they are strung. Cables from the factory are colored too. They won't all match to below colors.

All cables should not be real tight. Should be a little loose.

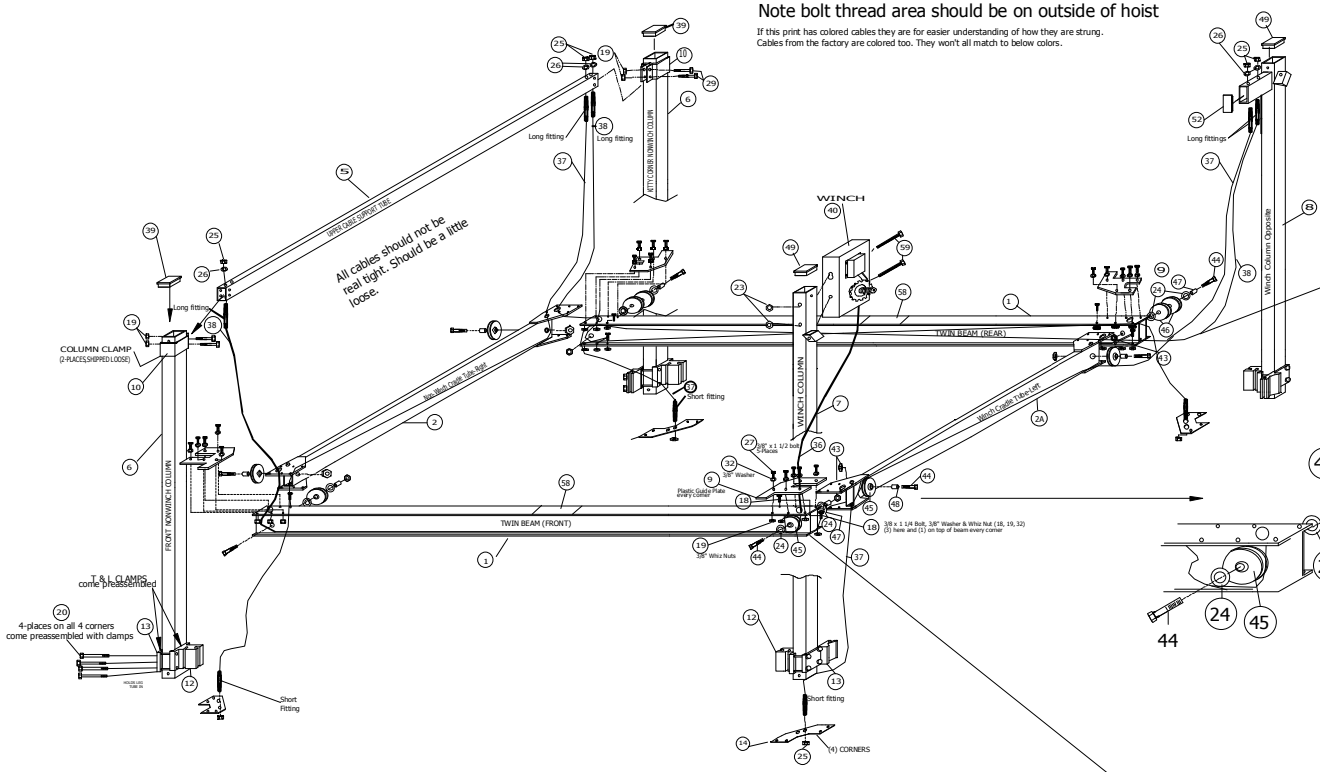

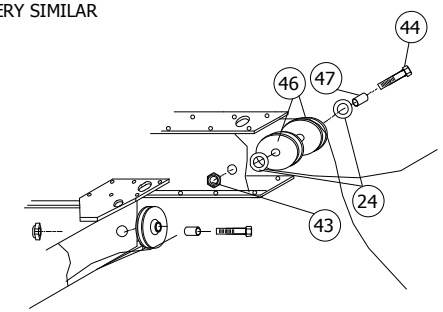

EXPLODED VIEW OF SHEAVE ASSEMBLIES LOCATED IN REAR TWIN BEAM AND CRADLE TUBE LEFT OR RIGHT

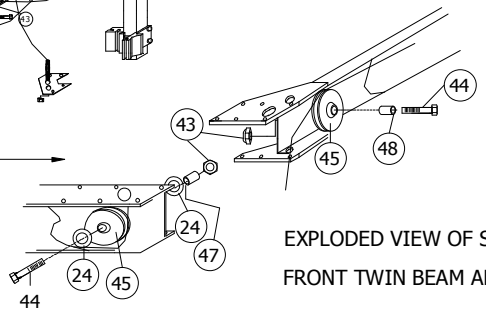

EXPLODED VIEW OF SHEAVE ASSEMBLIES LOCATED IN FRONT TWIN BEAM AND CRADLE TUBE LEFT OR RIGHT

TWIN BEAMS(#1) AND CRADLE TUBES(#2 & 2A) COME PRE-CABLED
T & L CLAMPS ARE INSTALLED (12)&(13) ON THE COLUMNS AT THE FACTORY

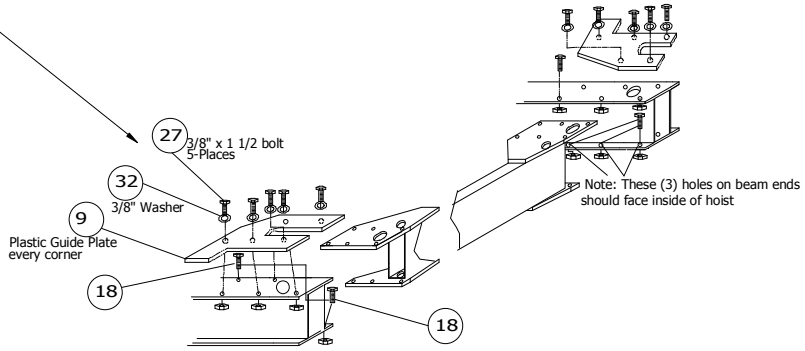

EXPLODED VIEW OF CORNER ASSEMBLY

3/8 x 1 1/4 Bolt & 3/8" Whiz Nut (18, 19) (3) here and (1) on top of beam every corner

SEE PARTS LIST FOR ABOVE PART NUMBERS
DOCUMENT# A-MH-V45R15PARTSLIST AND
DOCUMENT# A-MH-V35R15PARTSLIST
DOCUMENT# A-MH-V25R15PARTSLIST

READ MANUAL BEFORE USING HOIST
Manual, parts list and drawing on the web WWW.CRAFTLANDER.COM

NOTE: WHEN ORDERING REPLACEMENT PARTS A SERIAL NUMBER WILL BE REQUIRED TO ENSURE RECEIPT OF CORRECT ITEMS

INNER FRAME ASSEMBLY

Rev	Date	Description	Int

NuCraft Metal Products
402 Southline Rd.
Roscommon,MI 48653
CRAFTLANDER

Scale: None	Approved by:	Drawn by: RLW
Date: 1/9/13		
Assembly and part locations for V25108, V35108, V35120, V45108, V45114, & V45120		Drawing Number A-MH-V253545R15-2